ULTRAMINIATURE 5V OUTPUT HIGH TEMPERATURE PRESSURE TRANSDUCER WITH INTEGRATED TEMPERATURE SENSOR

ETL/T-312 (M) SERIES

- Combined Pressure and Temperature Capability
- Robust Construction
- Excellent Long Term Stability
- Patented Leadless Technology **VIS**®
- Designed For Industrial And Automotive Applications

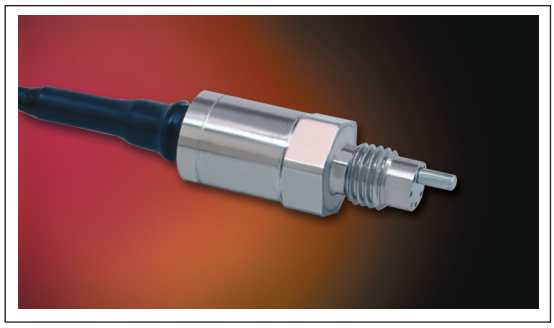

The ETL/T-312 is a miniature threaded pressure transducer/platinum RTD combination. The pressure transducer utilizes a patented silicon on silicon design. The platinum RTD protrudes beside the diaphragm to sense media temperature. The pressure and temperature devices are designed to operate independently. All wetted parts of the transducer are compatible with most automotive fluids.
Part performance not guaranteed if used in water.

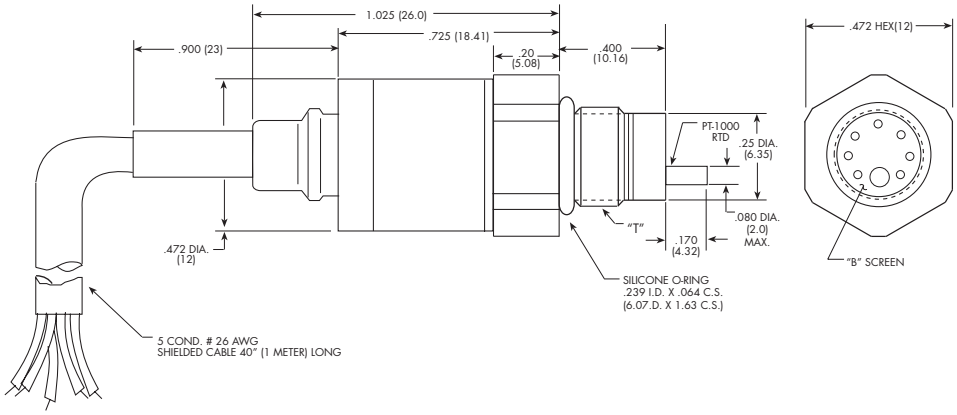

WIRING	
RED	+ IN
BLACK	COMMON
GREEN	+ OUT
WHITE	TEMP. OUT
BLUE	TEMP. OUT

P/N	"T"
312	5/16 - 24 UNF-2A
312M	M 8 x 1

INPUT	Pressure Range	0.7 10	1.0 15	1.7 25	3.5 50	7 100	17 250	35 500	70 1000	170 2500	250 BAR 3600 PSI
	Operational Mode	Absolute		Absolute, Sealed Gage							
	Over Pressure	2 Times Rated Pressure to 1000 PSI (70 BAR) 1.5 Times Rated Pressure Above 1000 PSI to a Max. of 5000 PSI (350 BAR)									
	Burst Pressure	3 Times Rated Pressure to a Max. of 5000 PSI (350 BAR)									
	Pressure Media	Most Conductive Liquids and Gases - Please Consult Factory (All Media May Not Be Suitable With O-Ring Supplied)									
	Maximum Electrical Current	25 mA									
	Rated Electrical Excitation	12 ± 4 VDC									
	RTD Excitation	0.3mA (1mA Max.)									
OUTPUT	Full Scale Reading	4.5V ± 1.5% (3 Wire System Single Ended Output)									
	Residual Unbalance	0.5V ± 75mV									
	Output Impedance	200 Ohms (Nom.)									
	RTD	1000 Ohms Platinum, DIN EN 60751 Tables, Class A (65% Response Time 3 Seconds Max.) in Liquid									
	Bandwidth (-3dB)	DC to 3000 Hz									
	Combined Non-Linearity, Hysteresis and Repeatability	± 0.1% BFSL (Typ.), ± 0.25% BFSL (Max.)									
	Resolution	Infinitesimal									
	Acceleration Sensitivity % FS/g Perpendicular	$1.0x10^{-3}$	$6.5x10^{-4}$	$5.0x10^{-4}$	$3.0x10^{-4}$	$1.5x10^{-4}$	$1.0x10^{-4}$	$6.0x10^{-5}$	$4.0x10^{-5}$	$2.5x10^{-5}$	$1.7x10^{-5}$
	Insulation Resistance	100 Megohm Min. @ 50 VDC									
ENVIRONMENTAL	Operating Temperature Range	-20°F to +365°F (-29°C to +185°C)									
	Compensated Temperature Range	+68°F to +350°F (+20°C to +175°C)									
	Total Error Band (Excluding End Points)	± 2% FS/100°C ≤ 217.5 PSI (15 BAR), ± 1% FS/100°C > 217.5 PSI (15 BAR)									
	Linear Vibration	20g Peak, Sine 10 to 2000 Hz									
	Mechanical Shock	20g Half Sine Wave 11 msec. Duration									
PHYSICAL	Electrical Connection	5 Conductor 26 AWG Shielded Cable 36" Long									
	Weight	15 Grams Excluding Cable									
	Pressure Sensing Principle	Fully Active Four Arm Wheatstone Bridge Dielectrically Isolated Silicon on Silicon Patented Leadless Technology									
	Mounting Torque	50 Inch-Pounds (Max.) 6Nm									

Note: Custom pressure ranges, accuracies, mechanical configurations and RTD resistance available. Dimensions are in inches. Dimensions in parenthesis are in millimeters. All dimensions nominal. (L) Continuous development and refinement of our products may result in specification changes without notice. *Copyright © 2014 Kulite Semiconductor Products, Inc. All Rights Reserved.*
Kulite miniature pressure transducers are intended for use in test and research and development programs and are not necessarily designed to be used in production applications. For products designed to be used in production programs, please consult the factory.

KULITE SEMICONDUCTOR PRODUCTS, INC. • One Willow Tree Road • Leonia, New Jersey 07605 • Tel: 201 461-0900 • Fax: 201 461-0990 • http://www.kulite.com